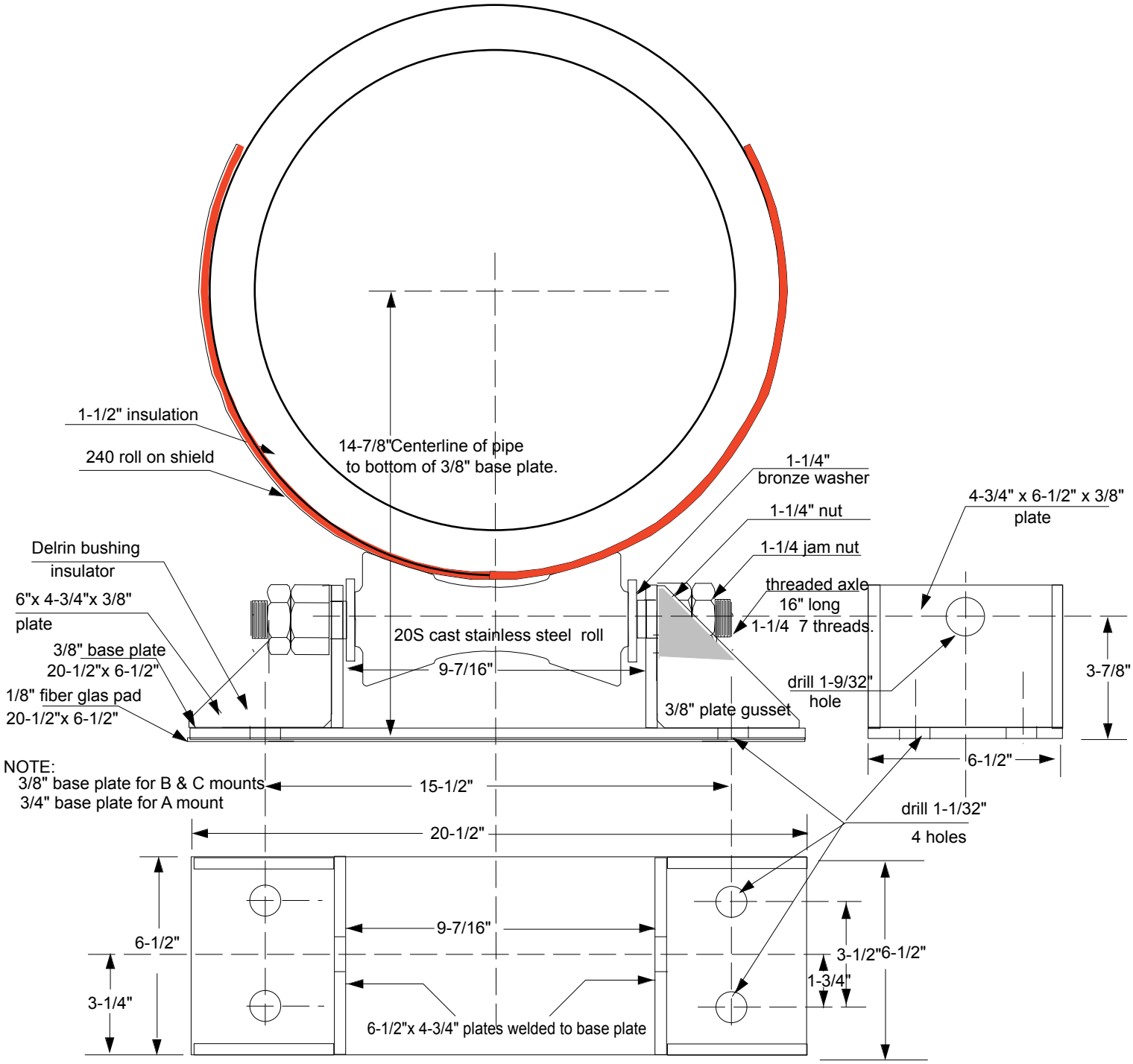

LB&A. INC.	
Special stainless steel 20" Roller Chair	
DATE	SCALE none
DRAWN BY CED	DWG NO. 6spec20